ภาคผนวกที่ 4

สรุปเอกสารสอบเทียบอุปกรณ์เครื่องมือ

เอกสารการสอบเทียบเครื่องมือตรวจวัดคุณภาพน้ำ

CAL
Calibratech Co.,Ltd.
7/106-7 Moo 2, Sukhaprachasan 3 Rd., Bangpood, Pakkred, Nonthaburi 11120
Tel.(02) 964-6211 Fax.(02) 964-5155, e-mail : calibratech.cal@yahoo.com, calibratech.cal@hotmail.com

ilac-MRA

NSC-TISI-TIS17025
CALIBRATION 0030

Certificate of Calibration

Certificate No. : **68-430004-1**

Submitted by : C.E.M Technology (Thailand) Co.,Ltd.
219/43 Moo.12 Petchkasem Rd. Omnoi, Krathumban, Samutsakorn 74130 (Head Office)

Equipment : Digital Conductivity meter (Pocket)
Manufacturer : XS Instruments Model : PC 5
Serial No. : GB 0706/024 ID No. : WW-23-001

Environment : On site calibration was carried out at the Laboratory,
C.E.M Technology (Thailand) Co., Ltd.
Ambient Temperature (26.0 to 27.0) °C
Relative Humidity (45 to 50) %

Date of Received : 11 February 2025

Date of Calibration : 11 February 2025

Date of Issue : 17 February 2025

Calibrated by : Permpon Chanpu

Calibration Method : In-house method CAL-M4301 direct measurement by conductivity buffer solution

Reference Standard Instruments : This certification is traceable to the International System of Units

Standard Buffer Solution

Material	Lot No.	Exp. Date	Traceability
84 µS/cm	0300	01 June 2027	National Institute of Standards and Technology (NIST), U.S.A., S.R.M.
1413 µS/cm	970986	25 April 2025	CPA Chem Ltd. Accredited to ISO 17034 and ISO/IEC 17025
12.88 mS/cm	970987	25 April 2025	CPA Chem Ltd. Accredited to ISO 17034 and ISO/IEC 17025

Approved by : [redacted]
(Permpon Chanpu)
Supervisor

The Uncertainties are for a confidence probability of approximately 95%

This cerificate may not be reproduced other than in full except with the prior written approval of the Calibratech Co.,Ltd.

CAL
Calibratech Co.,Ltd.
7/106-7 Moo 2, Sukhaprachasan 3 Rd., Bangpood, Pakkred, Nonthaburi 11120
Tel.(02) 964-6211 Fax.(02) 964-5155, e-mail : calibratech.cal@yahoo.com, calibratech.cal@hotmail.com

Certificate of Calibration

Certificate No. : **68-430004-1**

Result of Calibration :

UUC Condition As-Received : Good

Function : Conductivity measurement

Before Adjustment

Standard Conductivity Solution	UUC Reading	Correction	Uncertainty (±)	Unit
84*	79.7	4.3	1.1	µS/cm
1413	1602	-189	9.0	µS/cm
12.88	12.81	0.07	0.082	mS/cm

After Adjustment : at 84, 1413 µS/cm 12.880 mS/cm

Standard Conductivity Solution	UUC Reading	Correction	Uncertainty (±)	Unit
84*	84.0	0.0	1.1	µS/cm
1413	1413	0	9.0	µS/cm
12.88	12.88	0.00	0.082	mS/cm

Remark

UUC : Unit Under Calibration

* This parameter are out of accreditation's scope.

This result of calibration was found accurate as shown on date and place of calibration only.

This reported uncertainty of measurement was based on a standard uncertainty multiplied by a coverage factor k = 2 , providing a level of confidence of approximately 95%

- oOo -

[redacted]

CAL

Calibratech Co.,Ltd.
7/106-7 Moo 2, Sukhaprachasan 3 Rd., Bangpood, Pakkred, Nonthaburi 11120
Tel.(02) 964-6211 Fax.(02) 964-5155, e-mail : calibratech.cal@yahoo.com, calibratech.cal@hotmail.com

NSC-TISI-TIS17025
CALIBRATION 0030

Certificate of Calibration

Certificate No. : **68-400172-1**

Submitted by : C.E.M Technology (Thailand) Co., Ltd.
219/43 Moo.12 Petchkasem Rd, Omnoi, Krathumban, Samutsakorn 74130 (Head Office)

Equipment : Temperature controlled enclosure (Refrigerator)
Manufacturer : Samchai — Model : LD2 DC 70
Range : N/A °C — Resolution : 1 °C
Serial No. : 85545 — ID No. : N/A

Environment : On site calibration was carried out at the Laboratory,
C.E.M Technology (Thailand) Co., Ltd.
Ambient Temperature : (27.0 to 28.0) °C
Relative Humidity : (50 to 55) %
Line Voltage : (223.0 to 225.0) V

Date of Received : 21 March 2025
Date of Calibration : 21 March 2025
Date of Issue : 22 March 2025
Calibrated by : Permpon Chanpu
Calibration Method : CAL-M4004, TLAS G-20
The temperature scale used was based on ITS-90

Reference Standard Instruments : This certification is traceable to the International System of Units
Standard Digital Thermometer with RTD Probe

ID No.	Cert. No.	Due Date	Traceability
400046 & 400047	68-400007-2	29 Jul 2025	National Institute of Metrology Thailand (NIMT)

Approved by : [redacted]
(Permpon Chanpu)
Supervisor

The Uncertainties are for a confidence probability of approximately 95%

This cerificate may not be reproduced other than in full except with the prior written approval of the Calibratech Co.,Ltd.

CAL

Calibratech Co.,Ltd.
7/106-7 Moo 2, Sukhaprachasan 3 Rd., Bangpood, Pakkred, Nonthaburi 11120
Tel.(02) 964-6211 Fax.(02) 964-5155, e-mail : calibratech.cal@yahoo.com, calibratech.cal@hotmail.com

Certificate of Calibration

Certificate No. : 68-400172-1

Result of Calibration : Without Adjustment
UUC Condition As-Received : Good
Function : Temperature measurement
This instrument was setting air ventilation at position 0 (close)

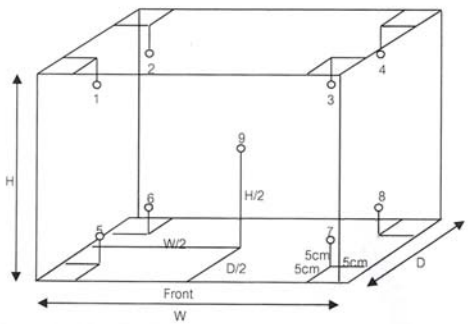

Inside of Chamber
W = 1.13 m
D = 0.51 m
H = 1.34 m
Capacity = 0.77 m^3

Test Point (°C)	Setting Temperature (°C)	Indicating Temperature (°C)	Measured Temperature (°C) @ Sensor No.									Uncertainty (±°C)
			1	2	3	4	5	6	7	8	9	
4	4	4	5.13	4.85	3.25	3.11	4.43	4.77	2.75	2.77	4.01	0.73

Test Point (°C)	Setting Temperature (°C)	Indicating Temperature (°C)	Measured Uniformity (°C)	Measured Stability (°C)	Overall Variation (°C)
4	4	4	1.29	0.08	2.55

Remark The uncertainty is not combine uniformity of the air chamber

This result of calibration was found accurate as shown on date and place of calibration only.

This reported uncertainty of measurement was based on a standard uncertainty multiplied by a coverage factor k = 2 , providing a level of confidence of approximately 95%

- o0o -

[redacted]

CAL
Calibratech Co.,Ltd.
7/106-7 Moo 2, Sukhaprachasan 3 Rd., Bangpood, Pakkred, Nonthaburi 11120
Tel.(02) 964-6211 Fax.(02) 964-5155, e-mail : calibratech_cal@yahoo.com, calibratech_cal@hotmail.com

NSC-TISI-TIS17025
CALIBRATION 0030

Certificate of Calibration

Certificate No. : **68-400089-2** **Page : 1 of 2**

Submitted by : C.E.M Technology (Thailand) Co., Ltd.
219/43 Moo.12 Petchkasem Rd, Omnoi, Krathumban, Samutsakorn 74130 (Head Office)

Equipment : Temperature Indicator with Thermistor Probe

Temperature Indicator

Manufacturer :	XS Instruments	Model :	PC 5
Range :	N/A °C	Resolution :	0.1 °C
Serial No. :	GB 0706/024	ID No. :	WW-23-001

Thermistor probe

Model :	N/A	Sheath Material :	Plastic
Diameter :	10 mm.	Length :	65 mm.
Serial No. :	GB 0706/024	ID No. :	WW-23-001

Environment : On site calibration was carried out at the Laboratory,
C.E.M Technology (Thailand) Co., Ltd.

Ambient Temperature :	(26.0 to 27.0)	°C
Relative Humidity :	(45 to 50)	%
Line Voltage :	(224.5 to 226.0)	VAC

Date of Received : 11 February 2025
Date of Calibration : 11 February 2025
Date of Issue : 17 February 2025
Calibrated by : Permpon Chanpu

Calibration Method : This instrument was calibrated by In-house method comparison technique CAL-M4003 by compared with PRT in the liquid bath at the constant controlled temperature.
The temperature scale used was based on ITS-90

Reference Standard Instruments : This certification is traceable to the International System of Units

1. Platinum Resistance Thermometer (PRT)

ID No.	Cert. No.	Due Date	Traceability
400002	TT-0095-24	01 Jul 2026	National Institute of Metrology Thailand (NIMT)

2. Standard Digital Thermometer

ID No.	Cert. No.	Due Date	Traceability
400033	24E633	21 Feb 2026	National Institute of Metrology Thailar[redacted]

Approved [redacted]
(Permpon Chanpu)
Supervisor

The Uncertainties are for a confidence probability of approximately 95%

This cerificate may not be reproduced other than in full except with the prior written approval of the Calibratech Co.,Ltd.

CAL
Calibratech Co.,Ltd.
7/106-7 Moo 2, Sukhaprachasan 3 Rd., Bangpood, Pakkred, Nonthaburi 11120
Tel.(02) 964-6211 Fax.(02) 964-5155, e-mail : calibratech_cal@yahoo.com, calibratech_cal@hotmail.com

Certificate of Calibration

Certificate No. : **68-400089-2** **Page : 2 of 2**

Result of Calibration : Without Adjustment

UUC Condition As-Received : Good

Function : Temperature measurement

Immersion Depth (mm.)	Standard Reading (°C)	UUC Reading (°C)	Correction (°C)	Uncertainty (±°C)
65	15.002	15.1	-0.1	0.19
65	30.005	30.0	0.0	0.19
65	45.004	44.9	0.1	0.19

Remark

UUC : Unit Under Calibration

This result of calibration was found accurate as shown on date and place of calibration only.

This reported uncertainty of measurement was based on a standard uncertainty multiplied by a coverage factor k = 2 , providing a level of confidence of approximately 95%

-oOo-

[redacted]

การดูแลบำรุงรักษาเชิงป้องกัน

Preventive Maintenance

Gerhardt
Analytical Systems

DKSH

บริษัท ดีเคเอสเอช เทคโนโลยี จำกัด

ฝ่ายบริการหลังการขาย

โทร 0 2 639 7000 E-mail: service.tec.th@dksh.com

ฝ่ายขายและการตลาด

โทร 0 2 639 7000 E-Mail : marketing.tec.th@dksh.com

Website : www.dksh.co.th/technology/scientific-thailand

เงื่อนไขการให้บริการ Preventive Maintenance

บริษัทฯ จะส่งวิศวกรผู้ชำนาญ เพื่อให้บริการตามขอบข่ายของการบริการ เฉพาะ ในวันและเวลา ราชการ หากมีความประสงค์ที่จะรับบริการนอกเหนือจากวัน เวลา ราชการ (วันหยุดเสาร์ – อาทิตย์ หรือวันหยุด นักขัตฤกษ์) บริษัท ฯ จะคิดค่าบริการเพิ่มเติมตามอัตราที่กฎหมายแรงงานกำหนดไว้

ขอบข่ายการบริการ

- ตรวจสอบสภาพการทำงานต่าง ๆ ของเครื่องมือ
- ทดสอบประสิทธิภาพการทำงานของเครื่องมือ
- รายการผลการตรวจสอบเครื่องมือ

หมายเหตุ

- ราคานี้ไม่รวมถึงค่าบริการซ่อม หรือ เปลี่ยนอะไหล่ที่ชำรุดเสียหาย หรือหมดสภาพการใช้งาน
- ในกรณีที่ผู้รับบริการอยู่นอกเขตพื้นที่ให้บริการ บริษัทฯ จำเป็นต้องคิดค่าใช้จ่ายเพิ่มเติม ได้แก่ ค่าเดินทาง เป็นต้น
- บริษัท ฯ ขอสงวนสิทธิ์ในการเปลี่ยนแปลงราคา โดยไม่แจ้งให้ทราบล่วงหน้า

ช่องทางการติดต่อ

DKSH Technology Limited (บริษัท ดีเคเอสเอช เทคโนโลยี จำกัด)
เลขที่ 2533 ถนนสุขุมวิท แขวงบางจาก เขตพระโขนง กรุงเทพฯ 10260
เลขประจำตัวผู้เสียภาษี 010-555-001-4547 (สำนักงานใหญ่)

LINE: @dkshscientific

Call center 0 2 639 7000

DKSH Scientific

www.dksh.com/scientific-thailand

marketing.tec.th@dksh.com

@dkshscientific

Preventive Maintenance Contract

จำนวนในการทำสัญญาบริการ ...1... ครั้งต่อปี
ครั้งที่ ..1.. วันที่ 14/05/2025.....

รายละเอียดผู้รับบริการ

หน่วยงาน	บริษัท ซี.อี.เอ็ม เทคโนโลยี (ไทยแลนด์) จำกัด		
ที่อยู่	219/43 หมู่12 ถนนเพชรเกษม ตำบลอ้อมน้อย อำเภอกระทุ่มแบน จังหวัดสมุทรสาคร 74130		
โทรศัพท์	0869054664	แฟกซ์	-

ผู้ติดต่อ

ชื่อ - นามสกุล	คุณศิริพาพร พิมพา				
ตำแหน่ง	เจ้าหน้าที่ห้องปฏิบัติการ				
โทรศัพท์	0869054664	เบอร์ต่อ	-	แฟกซ์	-
E-mail	lab.cemtech1@gmail.com				

รายละเอียดผู้ให้บริการ

บริษัท ดีเคเอสเอช เทคโนโลยี จำกัด (ฝ่ายบริการหลังการขาย) (สำนักงานใหญ่) เลขที่ 2533 ถนนสุขุมวิท แขวงบางจาก เขตพระโขนง กรุงเทพฯ 10260 โทรศัพท์ 0 2 693 7000 Email: Jirayut.js@dksh.com เจ้าหน้าที่ประสานงาน : คุณจิรายุษ สเลอาด			
เจ้าหน้าที่ผู้ให้บริการ	นายจิรายุษ สเลอาด		
ตำแหน่ง	Specialist,TechnicalService.		
โทรศัพท์	0938138736	แฟกซ์	-
E-mail	Jirayut.js@dksh.com		

ลงนามผู้รับบริการ		ลงนามผู้ให้บริการ	Jirayut Saley-Ard
ตัวบรรจง	(.....)	ตัวบรรจง	(นาย จิรายุษ สเลอาด)
ตำแหน่ง		ตำแหน่ง	Specialist,TechnicalService.
วันที่ / ประทับตราบริษัท		วันที่ / ประทับตราบริษัท	14/05/2025

JOB:WO-00070598 MODEL:VAP 200 S/N:. GER5200180181

Operational Qualification (OQ)

ตรวจสอบสภาพเครื่อง

FRONT

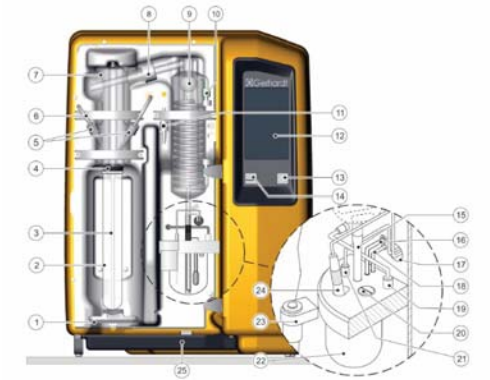

No		PASS	FAIL	N/A
1	Quick clamping device with clamping block	☑	☐	☐
2	Digestion tube 250/300 ml	☑	☐	☐
3	PTFE steam inlet tubing	☑	☐	☐
4	Connection stopper , Viton	☑	☐	☐
5	Screw cap GL18	☑	☐	☐
6	PTFE-inlet tubing NaOH	☑	☐	☐
7	Distribution head made of glass	☑	☐	☐
8	Screw cap GL32	☑	☐	☐
9	Distillation condenser made of glass	☑	☐	☐
10	Screw cap GL14	☑	☐	☐
11	Ventilation valve	☑	☐	☐
12	Control panel	☑	☐	☐
13	Operating Button	☑	☐	☐
14	USB interface (with protective cap)	☑	☐	☐
15	Silicone tubing 8/10 for distillate discharge **	☐	☐	☑
16	Verprene tubing 4/8 , receiver suction **	☐	☐	☑
17	Cable duct for electrode cable + titration tube**	☐	☐	☑
18	Silicone tubing 4/7 , boric acid inlet**	☐	☐	☑
19	Sensor for level monitoring including connector**	☐	☐	☑
20	Agitator motor with propeller**	☐	☐	☑
21	Titration acid inlet tube **	☐	☐	☑
22	Receiver glass**	☐	☐	☑
23	Holder for pH electrode , removable**	☐	☐	☑
24	pH electrode (combined electrode)**	☐	☐	☑
25	Drip tray PP	☑	☐	☐

** only VAP 450

REAR

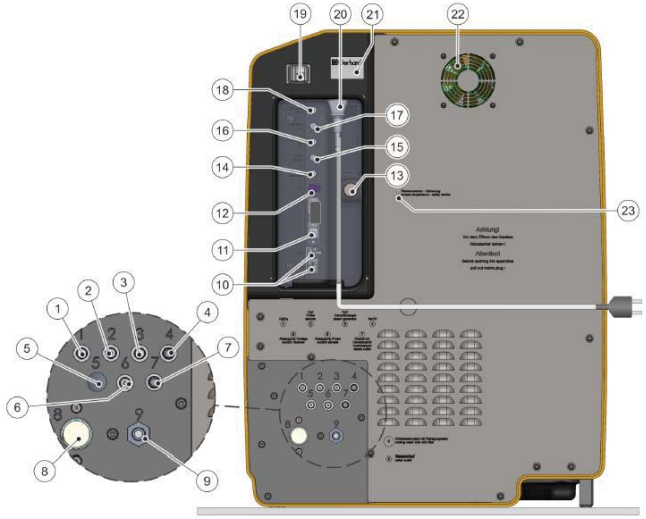

No		PASS	FAIL	N/A
1	Tube connection for sample H3BO3 supply	☐	☐	☑
2	Tube connection for sample H2O supply	☐	☐	☑
3	Tube connection for steam generator H2O supply	☑	☐	☐
4	Tube connection for NaOH supply	☑	☐	☐
5	Tube connection for receiver glass extraction	☑	☐	☐
6	Tube connection for sample waste extraction	☑	☐	☐
7	Tube connection , overpressure steam outlet	☑	☐	☐
8	Connection for cooling water supply (with cleaning sieve)	☑	☐	☐
9	Tube connection for cooling water outlet	☑	☐	☐
10	4 X USB interface	☑	☐	☐
11	1 X RS-232 Interface	☑	☐	☐
12	LAN Interface	☑	☐	☐
13	Screw cap for Perspex cover	☑	☐	☐
14	Connection socket for sample waste tank level monitoring	☑	☐	☐
15	Connection (not used)	☐	☐	☑
16	Connection socket for H2O tank level monitoring	☑	☐	☐
17	Connection socket for H3BO3 tank level monitoring	☑	☐	☐
18	Connection socket for NaOH tank level monitoring	☑	☐	☐
19	Overcurrent circuit breaker	☑	☐	☐
20	Apparatus socket (mains cable connection)	☑	☐	☐
21	Rating plate with serial number	☑	☐	☐
22	Exhaust air fan	☑	☐	☐
23	Excess temperature switch	☑	☐	☐

Inside Steam generator

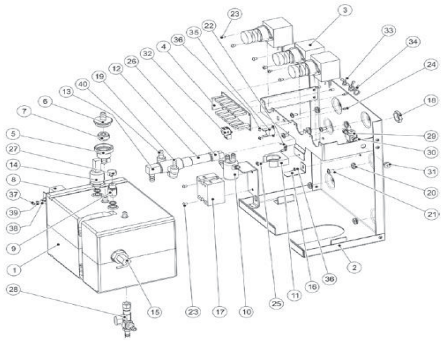

No		PASS	FAIL	N/A
1	Steam generator	☑	☐	☐
2	Steam generator traverse	☑	☐	☐
3	Pinch valve	☑	☐	☐
4	Circuit board distributor	☑	☐	☐
5	Valve tubing connection	☑	☐	☐
6	Housing safety valve	☑	☐	☐
7	Safety valve SKT	☑	☐	☐
8	Excess temperature protection , steam generator	☑	☐	☐
9	Safety valve G 1/8 0,5 bar	☑	☐	☐
10	Ventilation glass pinch valve VAPODEST	☑	☐	☐
11	Hose clamp for ventilation clamp	☑	☐	☐
12	Distributor PP	☑	☐	☐
13	Angle connection PP	☑	☐	☐
14	Pressure transmitter	☑	☐	☐
15	Level switch	☑	☐	☐
16	Fixing bracket steam generator	☑	☐	☐
17	Relay HT+	☑	☐	☐
18	VA Hexagon nut ½“	☑	☐	☐
19	Angle connection 1/8“	☑	☐	☐
20	Bushing nipple 6-10-14	☑	☐	☐
21	VA Lens head screw M5 X 10	☑	☐	☐
22	Grounding connection , 2-pole	☑	☐	☐
23	VA Lens head screw M4 X 6	☑	☐	☐
24	Spacer bolt 5 mm	☑	☐	☐
25	VA Lens head screw M4 X 10	☑	☐	☐
26	Tubing connection	☑	☐	☐
27	Hose clamp 14.5 mm	☑	☐	☐
28	Module ball valve with nozzles	☑	☐	☐
29	Cross manifold with spout	☑	☐	☐
30	Seal copper G 1/8	☑	☐	☐
31	Locking screw 1/8”	☑	☐	☐
32	Pin strip	☑	☐	☐
33	Bundle clamp 12 H 4500	☑	☐	☐
34	Bundle clamp 12 H 4502	☑	☐	☐
35	Temperature switch 80°C	☑	☐	☐
36	VA Lens head screw M3 X 6	☑	☐	☐
37	VA Hexagon nut M4	☑	☐	☐
38	Lins head screw M4 X 8	☑	☐	☐
39	VA Spring washer	☑	☐	☐
40	Angle connection , reduced , 1/8” PP	☑	☐	☐

Module Pump holder VAP200 - 450 V3

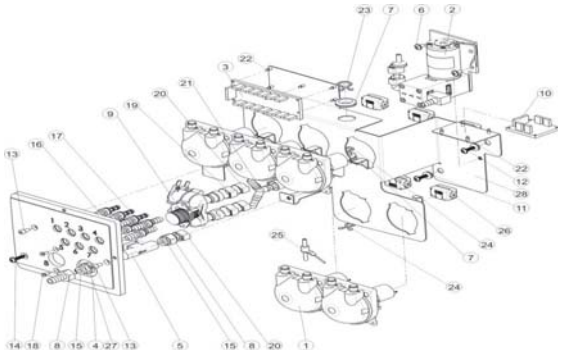

No		PASS	FAIL	N/A
1	Peristaltic pump	☑	☐	☐
2	Diaphragm pump NaOH. with non-return valve	☑	☐	☐
3	Circuit board	☑	☐	☐
4	Tubing connection module	☑	☐	☐
5	Flow controller	☑	☐	☐
6	Lens head screw M5 x 10	☑	☐	☐
7	Bushing nozzle	☑	☐	☐
8	Screw in socket	☑	☐	☐
9	Magnetic valve 2/2 way	☑	☐	☐
10	Circuit board distributor	☑	☐	☐
11	Bushing nozzle	☑	☐	☐
12	Screw 5 x 25	☑	☐	☐
13	Cylinder screw	☑	☐	☐
14	Screw 5 x 20	☑	☐	☐
15	Seal EPDM 15 x 4	☑	☐	☐
16	Tubing connection piece 51x10x6,5	☑	☐	☐
17	Tubing connection piece 51x10x10	☑	☐	☐
18	Screw M4x10	☑	☐	☐
19	Clamp	☑	☐	☐
20	Clamp	☑	☐	☐
21	Y-tube connector	☑	☐	☐
22	Spacer bolt 5 mm	☑	☐	☐
23	Bundle clamp	☑	☐	☐
24	Bundle clamp	☑	☐	☐
25	Retrofit earthing pumpv	☑	☐	☐
26	Snap ferrite	☑	☐	☐
27	Nut G 3/8"	☑	☐	☐
28	Pump holder plate	☑	☐	☐

Control panel

No		PASS	FAIL
1	Title bar	☑	☐
2	Status bar	☑	☐
3	Navigation button	☑	☐
4	Smart switch with multiple functions	☑	☐
5	USB interface	☑	☐

รายละเอียดการตรวจสอบ

ขั้นตอนการบริการ

ตรวจสอบระบบไฟฟ้า (Electrical Test)

- ความต้านทานทางไฟฟ้าของเครื่องกับกราวด์
- กระแสไฟฟ้าที่ใช้งาน

ตรวจสอบสภาพเครื่อง (Optical Test)

- Main cable
- Electric wiring
- Pumps
- Distribution Head
- Condensor
- Steam generator
- Tubing
- Viton cone

ตรวจสอบ Function การทำงาน (The FunctionTest)

- ระบบสร้างและควบคุมความดันของ Steam
- ระบบการเติมน้ำเข้า Sample Tube
- ระบบการเติม Na OH
- ระบบการเติม H3BO3

รายงานผลการให้บริการ

1. TECHNICAL DATA	Pass	Fail	N/A	Remark
Main Supply 220 volt + 10% 50 Hz with ground	☑	☐	☐	……..
Norminal current	☑	☐	☐	……8a…..

1.1 COOLING WATER BATH	Pass	Fail	N/A	Remark
Temperature 15-20 °C	☑	☐	☐	……..
Cooling Water Outlet	☑	☐	☐	……..
Control Temperature	☑	☐	☐	……..

1.2 OPTICAL TEST VAP200	Pass	Fail	N/A	Remark
Screw cap GL14	☑	☐	☐	……..
Screw cap GL18	☑	☐	☐	……..
Screw cap GL32	☑	☐	☐	……..
Distillation Head	☑	☐	☐	……..
Condensor	☑	☐	☐	ปลาย condensor บน
Viton Cone	☐	☑	☐	เสื่อมสภาพ
Ventilation Valve BV	☑	☐	☐	……..
Micro Switch Sample	☑	☐	☐	……..
Agitator motor for propeller	☐	☐	☑	……..

2. SYSTEM COOLING WATER INLET	Pass	Fail	N/A	Remark
Cooling Water Inlet	☑	☐	☐	……..
Cooling Water Outlet	☑	☐	☐	……..
Flow control valve	☑	☐	☐	……..

3.SYSTEM CONTROL	Pass	Fail	N/A	Remark
Display	☑	☐	☐	……..
Program	☑	☐	☐	……..
Adding NaOH	☑	☐	☐	……..
Adding H2O	☐	☐	☑	……..
Adding H3BO3	☐	☐	☑	……..
Suction Sample	☐	☐	☑	……..
Suction Reciver	☐	☐	☑	.....

4.SYSTEM DISTILLATION	Pass	Fail	N/A	Remark
Boiler	☑	☐	☐	……..
Level Sensor	☑	☐	☐	……..
Novopren	☐	☑	☐	เสื่อมสภาพ
Solenoid Valve Shut-Off	☑	☐	☐	……..
Solenoid Valve Steam	☑	☐	☐	……..
Solenoild Valve soft steam	☑	☐	☐	……..
Ventilation Valve Premount	☑	☐	☐	……..
Excess Pressure Detector	☑	☐	☐	……..
Heating Element	☑	☐	☐	……..

5. PUMP	Pass	Fail	N/A	Remark
Pump H_2O Steam	☑	☐	☐	……..
- Non-Return Valve	-	-	-	……..
Pump H_2O Sample	☐	☐	☑	……..
- Non-Return Valve	-	-	-	……..
Pump NaOH	☑	☐	☐	……..
- Non-Ruturn Valve	☑	☐	☐	……..
Pump H3BO3	☐	☐	☑	……..
- Non-Ruturn Valve	☐	☐	☑	……..
Pump suction	☐	☐	☑	……..
Pump suction receiver	☐	☐	☑	……..

6. The Following Program Run :		Pass	Fail	N/A	Remark
Addition H2O	0-999 ml.	☐	☐	☑	..……
Addition NaOH	0-999 ml.	☑	☐	☐	……
Addition H3BO3	0-999 ml.	☐	☐	☑	..……
Reaction Time	0-108 min	☑	☐	☐	……..
Distillation Time	0-108 min	☑	☐	☐	……..
Steam Capacity	10%-100%	☑	☐	☐	……..
Suction Sampe		☐	☐	☑	……..……..
Suction Receiver		☐	☐	☑	……..……..

7. Measured pumps		Remark
Pump NaOH	Volume : 13.33 ml	……..

Remark : ……ปลาย condensor เสื่อมสภาพ,viton cone เสื่อม,novoprean เสื่อม……
……

ข้อมูลสนับสนุนด้านเทคนิค (General Technical Support)

การบำรุงรักษาทั่วไป (Basic maintenance)

Cleaning program

Glass parts and tubes must be rinsed daily before starting analysis in order to prevent clogging by crystallising chemicals.

The following settings are recommended for this:

parameters	Value
H_2O addition	150 ml
NaOH addition	0 ml
Distillation time	7 min
Steam power	100 %
Reaction time	0 s
Suction sample	30 s

→ Insert a digestion tube (without sample) and start the program.

➔ All liquid carrying parts are cleaned. In the case of strong soiling, approx. 10 ml of sulphuric acid can also be added to the digestion tube.

General error message

Fault description	Cause	Remedy
'Cooling water flow volume too low'	Cooling water pressure under 1 bar	■ Open water tap. ■ Check coolant pressure. ■ Check coolant tube. Program continues automatically once error has been fixed.
'Sample tube missing'	Sample tube missing.	■ Insert sample tube. Continue program or restart.
'Distillation room protective door open'	Protection door not closed	■ Close protection door. Program continues automatically once error has been fixed.
'Reagent storage/ waste'	One or more storage tanks are empty	■ Fill storage tank. ■ Check correct seating of the universal sensors. The running program can be continued after rectification of the error.
	The sample waste tank is full.	■ Empty sample waste tank. ■ Check correct seating of the universal sensors. The running program can be continued after rectification of the error.

Analytical errors

Fault description	Cause	Remedy
Analysis results too high	The chemicals used are contaminated with nitrogen compounds.	■ Detailed checking of the chemicals. ■ Determination of a blank value. ■ Replace the chemicals if necessary.
	Violent reaction in the digestion tube, sodium hydroxide drops get into the receiver.	■ Increase of the water addition amount.
	Glass bridge of the condenser is broken or worn out, sodium hydroxide drops get into the receiver.	■ Replacement of the glass condenser.
	Glass cleaning agents in the digestion tube.	■ Clean digestion tube in advance with distilled water.
	Entrainment of ammonia from the previous sample.	■ Increase distillation time. ■ Check whether the sample was previously sufficiently alkalised.
Analysis result too low or no result	Incomplete distillation; distillation time too short.	■ No quantitative expulsion of the ammonia content. ■ The distillation amount should be 100 ml.
	Ammonia escapes at leaking places.	■ Soiled or defective Viton plugs; clean or replace. ■ Check seals (GL screw connections) on the distribution head; replace if necessary. ■ Check valve at the condenser is gummed up; clean or replace. ■ Digestion tube is damaged at the neck extension. ■ Distribution head glass leaks; replace.
	Addition amount of the sodium hydroxide too little; no ammonia development.	■ Check the constant flow rate of the NaOH pump (see Technical Data).
	Too low boric acid amount in the receiver; escaping ammonia is not completely bonded.	■ Increase of the boric acid amount.
	Tube not completely immersed in the acid receiver.	■ Increase of the acid amount.
	Formation of stable ammonia compounds which are not destroyed with sodium hydroxide.	■ This problem only occurs with catalysts containing mercury. Sodium sulphate solution destroys these compounds.

การดูแลบำรุงรักษาเชิงป้องกัน

Preventive Maintenance

บริษัท ดีเคเอสเอช เทคโนโลยี จำกัด

ฝ่ายบริการหลังการขาย

โทร 0 2 639 7000 E-mail: service.tec.th@dksh.com

ฝ่ายขายและการตลาด

โทร 0 2 639 7000 E-Mail : marketing.tec.th@dksh.com

Website : www.dksh.co.th/technology/scientific-thailand

เงื่อนไขการให้บริการ Preventive Maintenance

บริษัทฯ จะส่งวิศวกรผู้ชำนาญ เพื่อให้บริการตามขอบข่ายของการบริการ เฉพาะ ในวันและเวลา ราชการ หากมีความประสงค์ที่จะรับบริการนอกเหนือจากวัน เวลา ราชการ (วันหยุดเสาร์ – อาทิตย์ หรือวันหยุด นักขัตฤกษ์) บริษัทฯ จะคิดค่าบริการเพิ่มเติมตามอัตราที่กฎหมายแรงงานกำหนดไว้

ขอบข่ายการบริการ

- ตรวจสอบสภาพการทำงานต่าง ๆ ของเครื่องมือ
- ทดสอบประสิทธิภาพการทำงานของเครื่องมือ
- รายการผลการตรวจสอบเครื่องมือ

หมายเหตุ

- ราคานี้ไม่รวมถึงค่าบริการซ่อม หรือ เปลี่ยนอะไหล่ที่ชำรุดเสียหาย หรือหมดสภาพการใช้งาน
- ในกรณีที่ผู้รับบริการอยู่นอกเขตพื้นที่ให้บริการ บริษัทฯ จำเป็นต้องคิดค่าใช้จ่ายเพิ่มเติม ได้แก่ ค่าเดินทาง เป็นต้น
- บริษัท ฯ ขอสงวนสิทธิ์ในการเปลี่ยนแปลงราคา โดยไม่แจ้งให้ทราบล่วงหน้า

ช่องทางการติดต่อ

DKSH Technology Limited (บริษัท ดีเคเอสเอช เทคโนโลยี จำกัด)
เลขที่ 2533 ถนนสุขุมวิท แขวงบางจาก เขตพระโขนง กรุงเทพฯ 10260
เลขประจำตัวผู้เสียภาษี 010-555-001-4547 (สำนักงานใหญ่)

[redacted]

Call center 0 2 639 7000

DKSH Scientific

www.dksh.com/scientific-thailand

marketing.tec.th@dksh.com

@dkshscientific

Preventive Maintenance Contract

จำนวนในการทำสัญญาบริการ ...1...ครั้งต่อปี
ครั้งที่ .1.. วันที่ 14/05/2025.....

รายละเอียดผู้รับบริการ

หน่วยงาน	บริษัท ซี.อี.เอ็ม เทคโนโลยี (ไทยแลนด์) จำกัด		
ที่อยู่	219/43 หมู่12 ถนนเพชรเกษม ตำบลอ้อมน้อย อำเภอกระทุ่มแบน จังหวัดสมุทรสาคร 74130		
โทรศัพท์	0869054664	แฟกซ์	-

ผู้ติดต่อ

ชื่อ - นามสกุล	คุณศิริพาพร พิมพา				
ตำแหน่ง	เจ้าหน้าที่ห้องปฏิบัติการ				
โทรศัพท์	0869054664	เบอร์ต่อ	-	แฟกซ์	-
E-mail	lab.cemtech1@gmail.com				

รายละเอียดผู้ให้บริการ

บริษัท ดีเคเอสเอช เทคโนโลยี จำกัด (ฝ่ายบริการหลังการขาย) (สำนักงานใหญ่) เลขที่ 2533 ถนนสุขุมวิท แขวงบางจาก เขตพระโขนง กรุงเทพฯ 10260 โทรศัพท์ 0 2 693 7000 Email: Jirayut.js@dksh.com เจ้าหน้าที่ประสานงาน : คุณจิรายุษ สเลอาด			
เจ้าหน้าที่ผู้ให้บริการ	นายจิรายุษ สเลอาด		
ตำแหน่ง	Specialist,TechnicalService.		
โทรศัพท์	0938138736	แฟกซ์	-
E-mail	Jirayut.js@dksh.com		

ลงนามผู้รับบริการ			ลงนามผู้ให้บริการ	Jirayut Salay-Ard
ตัวบรรจง	(.....)		ตัวบรรจง	(นาย จิรายุษ สเลอาด)
ตำแหน่ง			ตำแหน่ง	Specialist,TechnicalService.
วันที่ / ประทับตราบริษัท			วันที่ / ประทับตราบริษัท	14/05/2025

JOB No: WO-00070598 .....MODEL: KT 20s..... S/N: GER5720180118

Part 3: ตรวจเช็คสภาพเครื่อง

Front and rear view of KT-L version

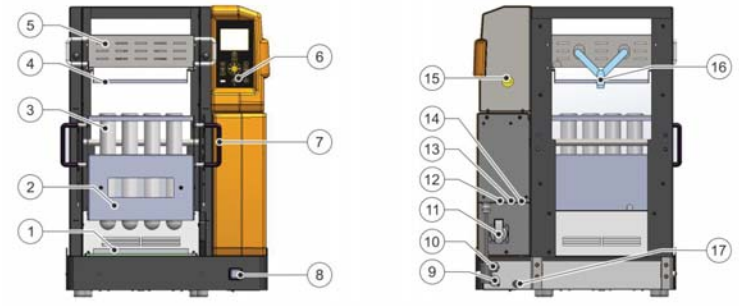

No.		PASS	Fail	N/A	Remark
1	KJELDATHERM digestion block	☑	☐	☐	เสื่อมสภาพ
2	Insert rack	☑	☐	☐	
3	Digestion tube	☑	☐	☐	
4	Stainless steel drip tray	☑	☐	☐	
5	Exhaust manifold	☑	☐	☐	
6	Controls module, removable	☑	☐	☐	
7	Handle for insert rack	☑	☐	☐	
8	Mains switch with overcurrent protection function	☑	☐	☐	
9	Connection for lift unit	☑	☐	☐	
10	Mains cable with plug	☑	☐	☐	
11	Power supply for TURBOSOG	☑	☐	☐	
12	Connects controller module to block	☑	☐	☐	
13	Connection for fan for cooling samples (optional)	☐	☐	☑	
14	Connection for external cooling water valve (optional)	☐	☐	☑	
15	Connects controller module to block	☑	☐	☐	
16	Connection for Iso-Versinic hose (extraction)	☑	☐	☐	
17	Excess temperature fuse	☑	☐	☐	
18	Lift	☑	☐	☐	

Part 4: ละเอียดและรายงานผลการให้บริการ Preventive Maintenance

4.1 ตรวจเช็คระบบไฟฟ้า

	Pass	Fai	N/A	Remark
ใช้ไฟ 220 V50 Hz	☑	☐	☐	……..
กระแสไฟฟ้าตามพิกัดเครื่อง	☑	☐	☐	……..

4.2 ตรวจสอบสภาพอุปกรณ์ภายนอก

	Pass	Fail	N/A	Remark
สายไฟของเครื่อง	☑	☐	☐	……..
ท่อแก้วรวมไอกรด	☑	☐	☐	……..
สายยางต่อกับท่อแก้วรวมไอกรด	☑	☐	☐	……..
สภาพของ Aluminum block	☑	☐	☐	เสื่อมสภาพ
การขึ้นลงของ Lift	☐	☐	☑	……..
Light	☐	☐	☑	……..
Current Switch	☑	☐	☐	……..
Thermostat	☑	☐	☐	……..

4.3ตรวจเช็คระบบการทำงาน

☐ KT-L

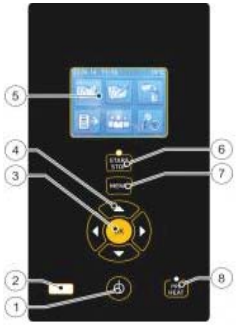

☑ KT

	Pass	Fail	N/A	Remark
Switch controller on or off.	☑	☐	☐	……
USB port	☑	☐	☐	……..
LAMP button	☐	☐	☑	……..
LIFT down button	☐	☐	☑	……..
LIFT up button	☐	☐	☑	……
OK button	☑	☐	☐	……
Navigation buttons	☑	☐	☐	……
Display	☑	☐	☐	……
START/STOP button	☑	☐	☐	……
MENU button	☑	☐	☐	……
SUC button	☐	☐	☑	……
COOLWATER button (optional)	☐	☐	☑	……
COOL VENT button (optional)	☐	☐	☑	……
PRE HEAT button	☑	☐	☐	……
การขึ้นของอุณหภูมิมากกว่า10องศาต่อนาทีที่250องศา	☑	☐	☐	……
การทำงานของตัวป้องกันอุณหภูมิสูงเกิน	☑	☐	☐	……
การทำงานของระบบควบคุมอุณหภูมิ	☑	☐	☐	……

การบำรุงรักษาทั่วไป (Basic maintenance)

1. การย่อยตัวอย่างเกิดการเดือดที่รุนแรงอันเนื่องจากตัวอย่างนั้นสามารถป้องกันได้โดยแนะนำให้ย่อยด้วยการตั้งการเพิ่มอุณหภูมิเป็นระดับเช่น ย่อยที่ระดับอุณหภูมิ 250 C ครบเวลา 15 นาทีจึงเปลี่ยนเป็นอุณหภูมิ 380 C เพื่อป้องกันการล้นออกมา

2. เมื่อใช้เสร็จไม่ควรปล่อยให้ Tube เย็นกับตัวเครื่อง

3. ต้องนำถาดลองไอกรดใส่ทุกครั้งหลังจากใช้งานเสร็จ เพื่อป้องกันการหยดของไอกรดที่จะหยดลงมาที่ตัวเครื่อง

4. ทำความสะอาดตัวหลุมย่อยด้วยน้ำหรือผ้าชุบน้ำในกรณีที่มีคราบกรดหยดลงมาติดอยู่ในหลุม

เพื่อป้องกันไม่ให้คราบดังกล่าวไปกั้นการแผ่อุณหภูมิ

Certificate of Calibration

Equipment:	Cooled Incubator	Certificate No.:	C31250348
Model:	KB 240	Issued Date:	10 February 2025
Serial No.(or ID):	20180000012164 (WW-16-001)	Job No.:	WO-00060640
Manufacturer:	Binder	Page:	1 of 3
Condition:	In Condition	Ventilation Valve:	Closed
Shelves(pc.):	3		

Customer: C.E.M Technology (Thailand) Co., Ltd.
219/43 Moo 12 Petchkasem Road,
Omnoi Krathum Baen, Samut Sakhon 74130 Thailand

Environment Condition:

Temperature:	22 °C	±	1.8	°C
Humidity:	61 %RH	±	5.3	%RH
Voltage:	230 VAC	±	1.5	VAC

Calibration Place: C.E.M Technology (Thailand) Co., Ltd. (Laboratory Room)
219/43 Moo 12 Petchkasem Road,
Omnoi Krathum Baen, Samut Sakhon 74130 Thailand

Calibration By: Mr. Tweewong Thaithiang

Calibration Date: 10 February 2025

The Method used: In house method, CAL-WI-16, base on TLAS-G20

Traceability: This certificate is traceable to the SI Units maintained by National Institute of Metrology (NIMT), Thailand through DKSH Technology Limited.
Certificate No. C10240018

[redacted]

(Mr. Tweewong Thaithiang)
Person in charge

(Mr. Udon Srichana)
Authorized signatory

This certificate is issued the units of measurement according to the International System of Units (SI). It provides traceability of measurement to international or national standard or other recognized national standard laboratories.

The measurement uncertainty stated is the expanded uncertainty which is obtained from the standard uncertainty multiplied by the coverage factor (k=2) to provide a level of confidence of approximately 95%. It is determined in accordance with the Guide to Expression of Uncertainty in Measurement (GUM).

These results may be affected by deviations from specified conditions. The results relate only to the items tested, calibrated or sampled. The report shall not be reproduced except in full without approval of DKSH Technology Limited.

บริษัท ดีคเอสเอช เทคโนโลยี จำกัด
DKSH Technology Limited
2533 ถนนสุขุมวิท แขวงบางจาก เขตพระโขนง กรุงเทพมหานคร 10260
2533 Sukhumvit Road, Bangchak, Phrakhanong, Bangkok 10260
Phone: +66 2639 7000 Email: info.calibration@dksh.com Website: www.dksh.com/scientific-thailand

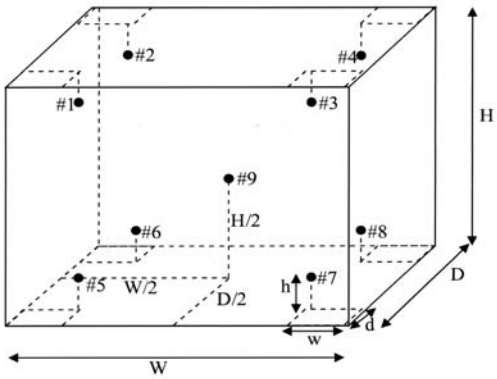

Standard Installation Locations

Volume (Calibration Zone)= 122 (Liters)

Inside chamber:	W = 65 (cm)	D = 50 (cm)	H = 76 (cm)
Standard Locations (#1, #2, #3, #4):	w = 7 (cm)	d = 5 (cm)	h = 8 (cm)
Standard Locations (#5, #6, #7, #8):	w = 7 (cm)	d = 5 (cm)	h = 8 (cm)

#9: Geometric center of the chamber

Position of Std	#1	#2	#3	#4	#5	#6	#7	#8	#9
Channel of Logger	201	202	203	204	205	206	207	208	209

Definitions

Indicating Temperature: The average reading of indicating device which forms the integral part of the enclosure.

Measured Temperature: The average reading of standards at any positions or location.

Measured Uniformity: The maximum difference of measured temperatures between of any probes and the measured temperature at the reference location which are observed at same time or at close observation time as possible to determine the temperature pattern or homogeneity with the chamber at steady-state. The reference probe is preferably located in the geometric center of the chamber.

Measured Stability: The one-half of greatest maximum difference of measured temperatures at any one probe.

Overall Variation: The difference of maximum and minimum measured temperatures throughout observation time.

บริษัท ดีคเอสเอช เทคโนโลยี จำกัด
DKSH Technology Limited
2533 ถนนสุขุมวิท แขวงบางจาก เขตพระโขนง กรุงเทพมหานคร 10260
2533 Sukhumvit Road, Bangchak, Phrakhanong, Bangkok 10260
Phone: +66 2639 7000 Email: info.calibration@dksh.com Website: www.dksh.com/scientific-thailand

Delivering Growth – in Asia and Beyond.

CAL-FM-C31-10: 12 Sep 2022

DKSH

Statements of conformity:

This conformity certificate documents the validity of the following statements of conformity based on the measurement results of corresponding calibration certificate:

The correction of indication determined during calibration are under given measurement and environmental conditions and considering the expanded measurement uncertainty (coverage probability 95%) within the specification. The given measurement uncertainty already includes other all effects by according to the standard method, TLAS-G20. Therefore, those parameters have not been assessed separately.

Tolerance and Decision rules:

Assessment of the conformity of the measurement device are done based on direct comparison of the relevant measurement results with the tolerances and decision rule are prescribed by the customer.

Decision rule :

- ☐ Choice A Binary Statement for Simple Acceptance Rule (w = 0), Specific Risk < 50% PFA.
- ☑ Choice B Non-binary statement with guard band (w = 1 U), Pass or Fail Specific Risk < 2.5% PFA and Condition Pass or Condition Fail Specific Risk < 50% PFA.
- ☐ Choice C Customer defined, Customers may define arbitrary multiple of r to have applied as guard band (w = r U) .

; PFA – Probability of False Accept

[redacted]

Authorized signatory

Without adjustment

Desired Temperature : 20.0°C **Tolerances : 1.0 °C**

Measurement Temperature at Spread Locations, Indicating of Unit Under Calibration: 20.0 °C

Locations	Measured (°C)	Correction* (°C)	Guard band (W) (± °C)	Tolerance (± °C)	Conformity
#1	20.14	0.14	0.33	1.0	Pass
#2	20.14	0.14	0.34	1.0	Pass
#3	19.96	-0.04	0.38	1.0	Pass
#4	20.14	0.14	0.35	1.0	Pass
#5	20.11	0.11	0.33	1.0	Pass
#6	20.17	0.17	0.34	1.0	Pass
#7	20.00	0.00	0.37	1.0	Pass
#8	20.06	0.06	0.35	1.0	Pass
#9	20.38	0.38	0.33	1.0	Pass

Correction* = Measured Temperature - Desired Temperature

The validity of the statements of conformity cannot be guaranteed for different places of use, environmental conditions or improper use.

The End of Statements of Conformity

บริษัท ดีคเอสเอช เทคโนโลยี จำกัด
DKSH Technology Limited
2533 ถนนสุขุมวิท แขวงบางจาก เขตพระโขนง กรุงเทพมหานคร 10260
2533 Sukhumvit Road, Bangchak, Phrakhanong, Bangkok 10260
Phone: +66 2639 7000 Email: info.calibration@dksh.com Website: www.dksh.com/scientific-thailand

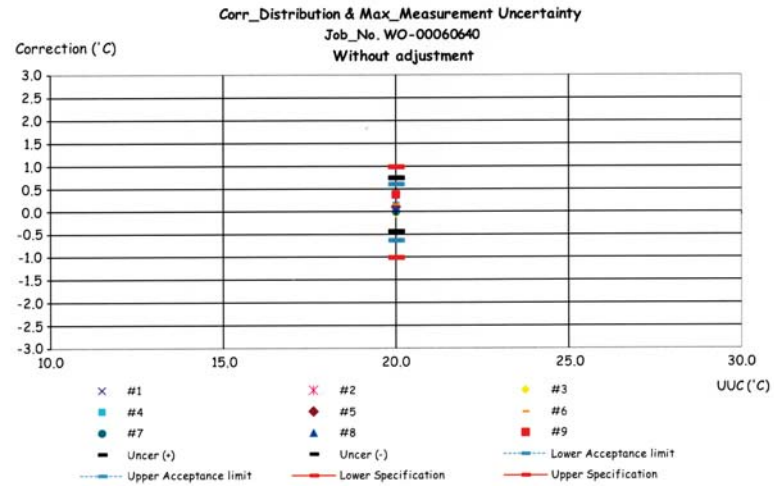

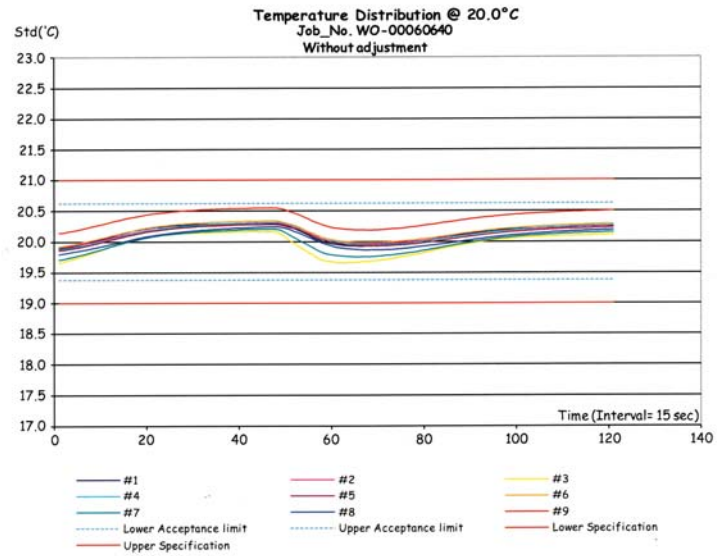

ใบตรวจสอบสภาพเครื่องควบคุมอุณหภูมิ

เลขที่ใบงาน: WO-00060640

ชนิดเครื่องมือ: Cooled Incubator รุ่น: KB 240

หมายเลขเครื่อง: 20180000012164 (WW-16-001)

ตรวจสอบ (รับ)		รายการตรวจเช็ค	ตรวจสอบ (ส่ง)		หมายเหตุ
10 Feb 2025			10 Feb 2025		
ปกติ	ไม่ปกติ		ปกติ	ไม่ปกติ	
		General			
☑	☐	1. สายไฟ	☑	☐	
☑	☐	2. การทำงาน Main Switch	☑	☐	
☑	☐	3. การทำงาน Selector Key	☑	☐	
☑	☐	4. การแสดงผล Display	☑	☐	
☑	☐	5. การทำงาน พัดลม	☑	☐	
☐	☐	6. สภาพ Lever of Ventilation valve	☐	☐	ไม่มี
☑	☐	7. สภาพ Lever door open / close	☑	☐	
☑	☐	8. สภาพ Door seal	☑	☐	
☑	☐	9. การทำงานของระบบ Safety	☑	☐	
☑	☐	10. การทำงานของระบบทำความเย็น	☑	☐	
☐	☐	11. การทำงานของระบบทำความชื้น	☐	☐	ไม่มี
☑	☐	12. สภาพตัวเครื่อง	☑	☐	
☑	☐	13. สภาวะแวดล้อม ณ สถานที่ตั้งเครื่อง	☑	☐	

ข้อแนะนำ : _____

Mr. Tweewong Thaithiang

Service Engineer

บริษัท ดีเคเอสเอช เทคโนโลยี จำกัด
DKSH Technology Limited
2533 ถนนสุขุมวิท แขวงบางจาก เขตพระโขนง กรุงเทพมหานคร 10260
2533 Sukhumvit Road, Bangchak, Phrakhanong, Bangkok 10260
Phone: +66 2639 7000 Email: info.calibration@dksh.com Website: www.dksh.com/scientific-thailand

Calibration Results:

Without adjustment

Measurement Temperature at Spread Locations, Indicating of Unit Under Calibration: 20.0 °C

Locations	Measured Temperature (°C)	Correction of UUC. (°C)	Uncertainty (± °C)
#1	20.14	0.14	0.33
#2	20.14	0.14	0.34
#3	19.96	-0.04	0.38
#4	20.14	0.14	0.35
#5	20.11	0.11	0.33
#6	20.17	0.17	0.34
#7	20.00	0.00	0.37
#8	20.06	0.06	0.35
#9	20.38	0.38	0.33

Temperature Distribution

Desired (°C)	Setting (°C)	Indicating (°C)	Measured Temperature at Spread Locations (°C)									Uncertainty (± °C)*
			#1	#2	#3	#4	#5	#6	#7	#8	#9	
20.0	20.0	20.0	20.14	20.14	19.96	20.14	20.11	20.17	20.00	20.06	20.38	0.38

Chamber Characterization

Indicating (°C)	Measured Uniformity (°C)	Measured Stability (± °C)	Overall Variation (°C)
20.0	0.57	0.26	0.89

Note: * Maximum uncertainty of the each position

The End of Certificate

บริษัท ดีเคเอสเอช เทคโนโลยี จำกัด
DKSH Technology Limited
2533 ถนนสุขุมวิท แขวงบางจาก เขตพระโขนง กรุงเทพมหานคร 10260
2533 Sukhumvit Road, Bangchak, Phrakhanong, Bangkok 10260
Phone: +66 2639 7000 Email: info.calibration@dksh.com Website: www.dksh.com/scientific-thailand

Delivering Growth – in Asia and Beyond.

Certificate of Calibration

Equipment:	Hot Air Oven	Certificate No.:	C31250347
Model:	UF 55	Issued Date:	10 February 2025
Serial No.(or ID):	B219.0142 (WW-05-002)	Job No.:	WO-00060640
Manufacturer:	Memmert	Page:	1 of 4
Condition:	In Condition	Ventilation Valve:	Closed
Shelves(pc.):	2		

Customer: C.E.M Technology (Thailand) Co., Ltd.
219/43 Moo 12 Petchkasem Road,
Omnoi Krathum Baen, Samut Sakhon 74130 Thailand

Environment Condition:

Temperature:	28 °C	±	1.0	°C
Humidity:	61 %RH	±	5.3	%RH
Voltage:	230 VAC	±	1.5	VAC

Calibration Place: C.E.M Technology (Thailand) Co., Ltd. (Laboratory Room)
219/43 Moo 12 Petchkasem Road,
Omnoi Krathum Baen, Samut Sakhon 74130 Thailand

Calibration By: Mr. Tweewong Thaithiang

Calibration Date: 10 February 2025

The Method used: In house method, CAL-WI-16, base on TLAS-G20

Traceability: This certificate is traceable to the SI Units maintained by National Institute of Metrology (NIMT), Thailand through DKSH Technology Limited.
Certificate No. C10240018

[redacted]

(Mr. Tweewong Thaithiang)
Person in charge

(Mr. Udon Srichana)
Authorized signatory

This certificate is issued the units of measurement according to the International System of Units (SI). It provides traceability of measurement to international or national standard or other recognized national standard laboratories.

The measurement uncertainty stated is the expanded uncertainty which is obtained from the standard uncertainty multiplied by the coverage factor (k=2) to provide a level of confidence of approximately 95%. It is determined in accordance with the Guide to Expression of Uncertainty in Measurement (GUM).

These results may be affected by deviations from specified conditions. The results relate only to the items tested, calibrated or sampled. The report shall not be reproduced except in full without approval of DKSH Technology Limited.

บริษัท ดีคเอสเอช เทคโนโลยี จำกัด
DKSH Technology Limited
2533 ถนนสุขุมวิท แขวงบางจาก เขตพระโขนง กรุงเทพมหานคร 10260
2533 Sukhumvit Road, Bangchak, Phrakhanong, Bangkok 10260
Phone: +66 2639 7000 Email: info.calibration@dksh.com Website: www.dksh.com/scientific-thailand

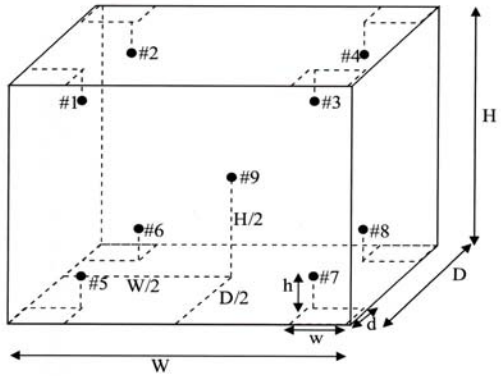

Standard Installation Locations

Volume (Calibration Zone)= 21 (Liters)

Inside chamber:	W = 40 (cm)	D = 33 (cm)	H = 40 (cm)
Standard Locations (#1, #2, #3, #4):	w = 5 (cm)	d = 5 (cm)	h = 5 (cm)
Standard Locations (#5, #6, #7, #8):	w = 5 (cm)	d = 5 (cm)	h = 5 (cm)

#9: Geometric center of the chamber

Position of Std	#1	#2	#3	#4	#5	#6	#7	#8	#9
Channel of Logger	101	102	103	104	105	106	107	108	109

Definitions

Indicating Temperature: The average reading of indicating device which forms the integral part of the enclosure.

Measured Temperature: The average reading of standards at any positions or location.

Measured Uniformity: The maximum difference of measured temperatures between of any probes and the measured temperature at the reference location which are observed at same time or at close observation time as possible to determine the temperature pattern or homogeneity with the chamber at steady-state. The reference probe is preferably located in the geometric center of the chamber.

Measured Stability: The one-half of greatest maximum difference of measured temperatures at any one probe.

Overall Variation: The difference of maximum and minimum measured temperatures throughout observation time.

บริษัท ดีคเอสเอช เทคโนโลยี จำกัด
DKSH Technology Limited
2533 ถนนสุขุมวิท แขวงบางจาก เขตพระโขนง กรุงเทพมหานคร 10260
2533 Sukhumvit Road, Bangchak, Phrakhanong, Bangkok 10260
Phone: +66 2639 7000 Email: info.calibration@dksh.com Website: www.dksh.com/scientific-thailand

Delivering Growth – in Asia and Beyond.

CAL-FM-C31-10: 12 Sep 2022

Calibration Results:

Without adjustment

Measurement Temperature at Spread Locations, Indicating of Unit Under Calibration: 104.0 °C

Locations	Measured Temperature (°C)	Correction of UUC. (°C)	Uncertainty (± °C)
#1	104.29	0.29	0.40
#2	104.01	0.01	0.40
#3	104.34	0.34	0.40
#4	104.23	0.23	0.39
#5	104.43	0.43	0.40
#6	104.19	0.19	0.40
#7	103.78	-0.22	0.40
#8	104.21	0.21	0.40
#9	104.47	0.47	0.41

Temperature Distribution

Desired (°C)	Setting (°C)	Indicating (°C)	Measured Temperature at Spread Locations (°C)									Uncertainty (± °C)*
			#1	#2	#3	#4	#5	#6	#7	#8	#9	
104.0	104.0	104.0	104.29	104.01	104.34	104.23	104.43	104.19	103.78	104.21	104.47	0.41

Chamber Characterization

Indicating (°C)	Measured Uniformity (°C)	Measured Stability (± °C)	Overall Variation (°C)
104.0	0.76	0.18	1.04

Note: * Maximum uncertainty of the each position

บริษัท ดีเคเอสเอช เทคโนโลยี จำกัด
DKSH Technology Limited
2533 ถนนสุขุมวิท แขวงบางจาก เขตพระโขนง กรุงเทพมหานคร 10260
2533 Sukhumvit Road, Bangchak, Phrakhanong, Bangkok 10260
Phone: +66 2639 7000 Email: info.calibration@dksh.com Website: www.dksh.com/scientific-thailand

Without adjustment (Cont.)

Measurement Temperature at Spread Locations, Indicating of Unit Under Calibration: 180.0 °C

Locations	Measured Temperature (°C)	Correction of UUC. (°C)	Uncertainty (± °C)
#1	180.20	0.20	0.43
#2	179.54	-0.46	0.43
#3	180.39	0.39	0.43
#4	180.09	0.09	0.43
#5	180.62	0.62	0.43
#6	179.97	-0.03	0.43
#7	179.53	-0.47	0.48
#8	180.27	0.27	0.43
#9	180.57	0.57	0.43

Temperature Distribution

Desired (°C)	Setting (°C)	Indicating (°C)	Measured Temperature at Spread Locations (°C)									Uncertainty (± °C)*
			#1	#2	#3	#4	#5	#6	#7	#8	#9	
180.0	xxx	180.0	180.20	179.54	180.39	180.09	180.62	179.97	179.53	180.27	180.57	0.48

Chamber Characterization

Indicating (°C)	Measured Uniformity (°C)	Measured Stability (± °C)	Overall Variation (°C)
180.0	1.26	0.19	1.39

Note: * Maximum uncertainty of the each position

The End of Certificate

บริษัท ดีเคเอสเอช เทคโนโลยี จำกัด
DKSH Technology Limited
2533 ถนนสุขุมวิท แขวงบางจาก เขตพระโขนง กรุงเทพมหานคร 10260
2533 Sukhumvit Road, Bangchak, Phrakhanong, Bangkok 10260
Phone: +66 2639 7000 Email: info.calibration@dksh.com Website: www.dksh.com/scientific-thailand

Statements of conformity:

This conformity certificate documents the validity of the following statements of conformity based on the measurement results of corresponding calibration certificate:

The correction of indication determined during calibration are under given measurement and environmental conditions and considering the expanded measurement uncertainty (coverage probability 95%) within the specification. The given measurement uncertainty already includes other all effects by according to the standard method, TLAS-G20. Therefore, those parameters have not been assessed separately.

Tolerance and Decision rules:

Assessment of the conformity of the measurement device are done based on direct comparison of the relevant measurement results with the tolerances and decision rule are prescribed by the customer.

Decision rule :

- ☐ Choice A Binary Statement for Simple Acceptance Rule (w = 0), Specific Risk < 50% PFA.
- ☑ Choice B Non-binary statement with guard band (w = 1 U), Pass or Fail Specific Risk < 2.5% PFA and Condition Pass or Condition Fail Specific Risk < 50% PFA.
- ☐ Choice C Customer defined, Customers may define arbitrary multiple of r to have applied as guard band (w = r U) .

; PFA – Probability of False Accept

[redacted]

(Mr. Udon Srichana)

Authorized signatory

Without adjustment

Desired Temperature : 104.0°C **Tolerances : 1.0 °C**

Measurement Temperature at Spread Locations, Indicating of Unit Under Calibration: 104.0 °C

Locations	Measured (°C)	Correction* (°C)	Guard band (W) (± °C)	Tolerance (± °C)	Conformity
#1	104.29	0.29	0.40	1.0	Pass
#2	104.01	0.01	0.40	1.0	Pass
#3	104.34	0.34	0.40	1.0	Pass
#4	104.23	0.23	0.39	1.0	Pass
#5	104.43	0.43	0.40	1.0	Pass
#6	104.19	0.19	0.40	1.0	Pass
#7	103.78	-0.22	0.40	1.0	Pass
#8	104.21	0.21	0.40	1.0	Pass
#9	104.47	0.47	0.41	1.0	Pass

Correction* = Measured Temperature - Desired Temperature

The validity of the statements of conformity cannot be guaranteed for different places of use, environmental conditions or improper use.

บริษัท ดีเคเอสเอช เทคโนโลยี จำกัด
DKSH Technology Limited
2533 ถนนสุขุมวิท แขวงบางจาก เขตพระโขนง กรุงเทพมหานคร 10260
2533 Sukhumvit Road, Bangchak, Phrakhanong, Bangkok 10260
Phone: +66 2639 7000 Email: info.calibration@dksh.com Website: www.dksh.com/scientific-thailand

Statements of conformity:(Cont.)

Without adjustment (Cont.)

Desired Temperature : 180.0°C **Tolerances : 2.0 °C**

Measurement Temperature at Spread Locations, Indicating of Unit Under Calibration: 180.0 °C

Locations	Measured (°C)	Correction* (°C)	Guard band (W) (± °C)	Tolerance (± °C)	Conformity
#1	180.20	0.20	0.43	2.0	Pass
#2	179.54	-0.46	0.43	2.0	Pass
#3	180.39	0.39	0.43	2.0	Pass
#4	180.09	0.09	0.43	2.0	Pass
#5	180.62	0.62	0.43	2.0	Pass
#6	179.97	-0.03	0.43	2.0	Pass
#7	179.53	-0.47	0.48	2.0	Pass
#8	180.27	0.27	0.43	2.0	Pass
#9	180.57	0.57	0.43	2.0	Pass

Correction* = Measured Temperature - Desired Temperature

The validity of the statements of conformity cannot be guaranteed for different places of use, environmental conditions or improper use.

The End of Statements of Conformity

บริษัท ดีเคเอสเอช เทคโนโลยี จำกัด
DKSH Technology Limited
2533 ถนนสุขุมวิท แขวงบางจาก เขตพระโขนง กรุงเทพมหานคร 10260
2533 Sukhumvit Road, Bangchak, Phrakhanong, Bangkok 10260
Phone: +66 2639 7000 Email: info.calibration@dksh.com Website: www.dksh.com/scientific-thailand

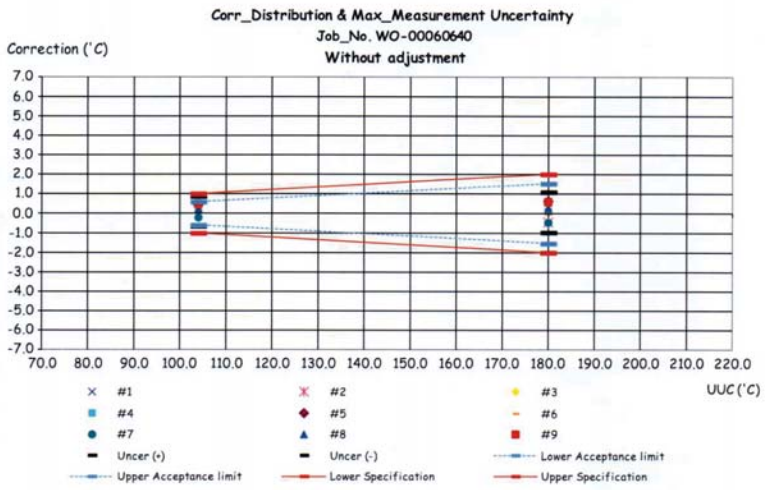
Corr_Distribution & Max_Measurement Uncertainty
Job_No. WO-00060640
Without adjustment
Correction (°C)
UUC (°C)
#1
#2
#3
#4
#5
#6
#7
#8
#9
Uncer (+)
Uncer (-)
Lower Acceptance limit
Upper Acceptance limit
Lower Specification
Upper Specification

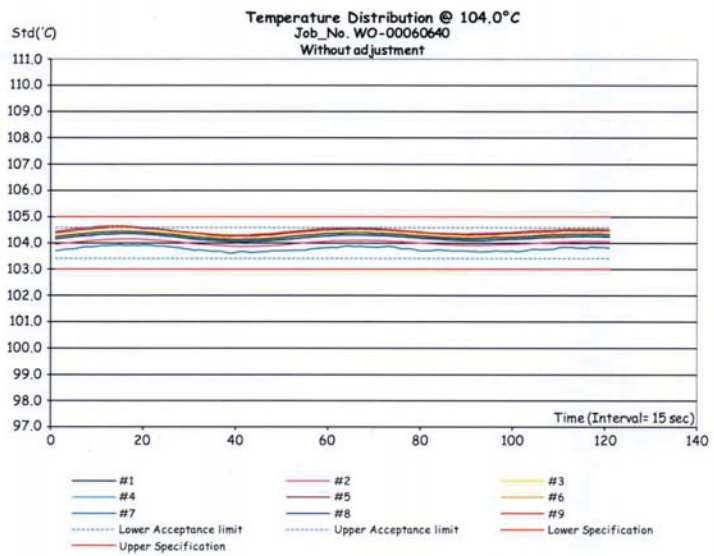
Temperature Distribution @ 104.0°C
Job_No. WO-00060640
Without adjustment
Std(°C)
Time (Interval= 15 sec)
#1
#2
#3
#4
#5
#6
#7
#8
#9
Lower Acceptance limit
Upper Acceptance limit
Lower Specification
Upper Specification

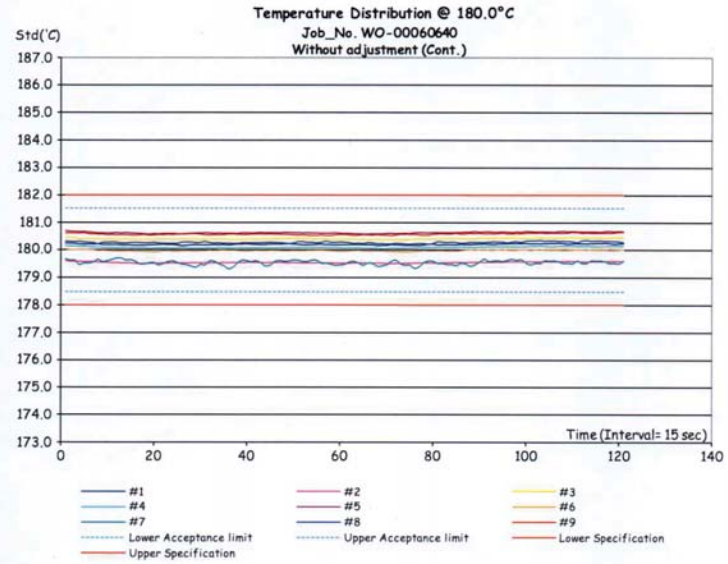
Temperature Distribution @ 180.0°C
Job_No. WO-00060640
Without adjustment (Cont.)
Std(°C)
Time (Interval= 15 sec)
#1
#2
#3
#4
#5
#6
#7
#8
#9
Lower Acceptance limit
Upper Acceptance limit
Lower Specification
Upper Specification

DKSH

ใบตรวจสอบสภาพเครื่องควบคุมอุณหภูมิ

เลขที่ใบงาน: WO-00060640

ชนิดเครื่องมือ: Hot Air Oven รุ่น: UF 55

หมายเลขเครื่อง: B219.0142 (WW-05-002)

ตรวจสอบ (รับ) 10 Feb 2025 ปกติ	ตรวจสอบ (รับ) 10 Feb 2025 ไม่ปกติ	รายการตรวจเช็ค	ตรวจสอบ (ส่ง) 10 Feb 2025 ปกติ	ตรวจสอบ (ส่ง) 10 Feb 2025 ไม่ปกติ	หมายเหตุ
		General			
☑	☐	1. สายไฟ	☑	☐	
☑	☐	2. การทำงาน Main Switch	☑	☐	
☑	☐	3. การทำงาน Selector Key	☑	☐	
☑	☐	4. การแสดงผล Display	☑	☐	
☑	☐	5. การทำงาน พัดลม	☑	☐	
☑	☐	6. สภาพ Lever of Ventilation valve	☑	☐	
☑	☐	7. สภาพ Lever door open / close	☑	☐	
☑	☐	8. สภาพ Door seal	☑	☐	
☑	☐	9. การทำงานของระบบ Safety	☑	☐	
☐	☐	10. การทำงานของระบบทำความเย็น	☐	☐	ไม่มี
☐	☐	11. การทำงานของระบบทำความชื้น	☐	☐	ไม่มี
☑	☐	12. สภาพตัวเครื่อง	☑	☐	
☑	☐	13. สภาวะแวดล้อม ณ สถานที่ตั้งเครื่อง	☑	☐	

ข้อแนะนำ : _____

Mr. Tweewong Thaithiang

Service Engineer

บริษัท ดีเคเอสเอช เทคโนโลยี จำกัด
DKSH Technology Limited
2533 ถนนสุขุมวิท แขวงบางจาก เขตพระโขนง กรุงเทพมหานคร 10260
2533 Sukhumvit Road, Bangchak, Phrakhanong, Bangkok 10260
Phone: +66 2639 7000 Email: info.calibration@dksh.com Website: www.dksh.com/scientific-thailand

Delivering Growth – in Asia and Beyond.

CAL

Calibratech Co.,Ltd.
7/106-7 Moo 2, Sukhaprachasan 3 Rd., Bangpood, Pakkred, Nonthaburi 11120
Tel.(02) 964-6211 Fax.(02) 964-5155, e-mail : calibratech.cal@yahoo.com, calibratech.cal@hotmail.com

ilac-MRA

NSC-TISI-TIS17025 CALIBRATION 0030

Certificate of Calibration

Certificate No. : 68-400089-3 **Page : 1 of 2**

Submitted by : C.E.M Technology (Thailand) Co.,Ltd.
219/43 Moo.12 Petchkasem Rd, Omnoi, Krathumban, Samutsakorn 74130 (Head Office)

Equipment : Temperature Indicator with Thermistor Probe

Temperature Indicator

Manufacturer : Apera Model : PC 910

Range : N/A °C Resolution : 0.1 °C

Serial No. : PC910X1220811001 ID No. : WW-03-002

Thermistor probe

Model : N/A Sheath Material : Stainless

Diameter : 4.8 mm. Length : 100 mm.

Serial No. : N/A ID No. : WW-03-002

Environment : On site calibration was carried out at the Laboratory,
C.E.M Technology (Thailand) Co., Ltd.

Ambient Temperature : (26.0 to 27.0) °C

Relative Humidity : (45 to 50) %

Line Voltage : (224.5 to 226.0) VAC

Date of Received : 11 February 2025

Date of Calibration : 11 February 2025

Date of Issue : 17 February 2025

Calibrated by : Permpon Chanpu

Calibration Method : This instrument was calibrated by In-house method comparison technique CAL-M4003 by compared with PRT in the liquid bath at the constant controlled temperature.
The temperature scale used was based on ITS-90

Reference Standard Instruments : This certification is traceable to the International System of Units

1. Platinum Resistance Thermometer (PRT)

ID No.	Cert. No.	Due Date	Traceability
400002	TT-0095-24	01 Jul 2026	National Institute of Metrology Thailand (NIMT)

2. Standard Digital Thermometer

ID No.	Cert. No.	Due Date	Traceability
400033	24E633	21 Feb 2026	National Institute of Metrology Tha[redacted]

Approv[redacted]

Supervisor

The Uncertainties are for a confidence probability of approximately 95%

This cerificate may not be reproduced other than in full except with the prior written approval of the Calibratech Co.,Ltd.

CAL-F0031-03

CAL
Calibratech Co.,Ltd.
7/106-7 Moo 2, Sukhaprachasan 3 Rd., Bangpood, Pakkred, Nonthaburi 11120
Tel.(02) 964-6211 Fax.(02) 964-5155, e-mail : calibratech_cal@yahoo.com, calibratech_cal@hotmail.com

Certificate of Calibration

Certificate No. : 68-400089-3

Result of Calibration : Without Adjustment

UUC Condition As-Received : Good

Function : Temperature measurement

Immersion Depth (mm.)	Standard Reading (°C)	UUC Reading (°C)	Correction (°C)	Uncertainty (±°C)
100	25.003	25.2	-0.2	0.19

Remark

UUC : Unit Under Calibration

This result of calibration was found accurate as shown on date and place of calibration only.

This reported uncertainty of measurement was based on a standard uncertainty multiplied by a coverage factor k = 2 , providing a level of confidence of approximately 95%

-oOo-

[redacted]

CAL
Calibratech Co.,Ltd.
7/106-7 Moo 2, Sukhaprachasan 3 Rd., Bangpood, Pakkred, Nonthaburi 11120
Tel.(02) 964-6211 Fax.(02) 964-5155, e-mail : calibratech_cal@yahoo.com, calibratech_cal@hotmail.com

ilac-MRA
NSC-TISI-TIS17025
CALIBRATION 0030

Certificate of Calibration

Certificate No. : 68-420017-3

Submitted by : C.E.M Technology (Thailand) Co., Ltd.
219/43 Moo.12 Petchkasem Rd, Omnoi, Krathumban, Samutsakorn 74130 (Head Office)

Equipment : pH Meter with electrode
pH meter
Manufacturer : Apera Model : PC 910
Range : N/A pH Resolution : 0.01 pH
Serial No. : PC910X1220811001 ID No. : WW-03-002
Electrode
Model : LabSen 211 Serial No. : 2110009/213
ID No. : WW-03-002

Environment : On site calibration was carried out at the Laboratory,
C.E.M Technology (Thailand) Co., Ltd.
Ambient Temperature : (26.0 to 27.0) °C
Relative Humidity : (45 to 50) %

Date of Received : 11 February 2025

Date of Calibration : 11 February 2025

Date of Issue : 17 February 2025

Calibrated by : Permpon Chanpu

Calibration Method : In-house method CAL-M4201 direct measurement by using standard voltage calibrator and using certified reference material (CRM)

Reference Standard Instruments : This certification is traceable to the International System of Units

1. Multiproduct Calibrator

ID No.	Cert. No.	Due Date	Traceability
400005	SG-E-00307/66	23 Aug 2025	National Institute of Metrology Thailand (NIMT)

2. Standard Buffer Solution

pH	Cert. No.	Lot No.	Exp. Date	Traceability
4.008	61293328	1027612	15 Sep 2026	CPA Chem Ltd. Accredited to ISO 17034 and ISO/IEC 17025
6.987	61297593	1027614	15 Sep 2025	CPA Chem Ltd. Accredited to ISO[redacted]
10.010	61306165	1027613	15 Sep 2025	CPA Chem Ltd. Accredited to ISO[redacted]

Approved by[redacted]

The Uncertainties are for a confidence probability of approximately 95%

This cerificate may not be reproduced other than in full except with the prior written approval of the Calibratech Co.,Ltd.

CAL
Calibratech Co.,Ltd.
7/106-7 Moo 2, Sukhaprachasan 3 Rd., Bangpood, Pakkred, Nonthaburi 11120
Tel.(02) 964-6211 Fax.(02) 964-5155, e-mail : calibratech.cal@yahoo.com, calibratech.cal@hotmail.com

Certificate of Calibration

Certificate No. : 68-420017-3

Result of Calibration :

UUC Condition As-Received : Good

Function : Electrical measurement

pH meter

Performing standard curve by Multiproduct Calibrator at pH (4,7,10)

Adjustment Curve at nominal pH	Applied Voltage (mV)	Nominal Value (pH)	UUC Reading (pH)	UUC Reading (mV)	Correction (mV)	Uncertainty (± mV)
4, 7, 10	177.4800	4	4.00	177	0	0.59
	0.0000	7	7.00	0	0	0.58
	-177.4800	10	10.00	-178	1	0.59

Function : pH meter with electrode

Performing a three - buffer standard curve using buffer nominal pH (4,7,10)

Adjustment Curve at nominal pH	Standard Buffer (pH)	UUC Reading (pH)	Correction (pH)	Uncertainty (± pH)
4, 7, 10	4.008	4.00	0.01	0.0097
	6.987	7.00	-0.01	0.011
	10.010	10.01	0.00	0.014

Remark

UUC : Unit Under Calibration

This result of calibration was found accurate as shown on date and place of calibration only.

This reported uncertainty of measurment was based on a standard uncertainty multiplied by a coverage factor k = 2 , providing a level of confidence of approximately 95%

- o0o -

[redacted]

CAL
Calibratech Co.,Ltd.
7/106-7 Moo 2, Sukhaprachasan 3 Rd., Bangpood, Pakkred, Nonthaburi 11120
Tel.(02) 964-6211 Fax.(02) 964-5155, e-mail : calibratech.cal@yahoo.com, calibratech.cal@hotmail.com

NSC-TISI-TIS17025
CALIBRATION 0030

Certificate of Calibration

Certificate No. : 68-430004-2

Submitted by : C.E.M Technology (Thailand) Co., Ltd.

219/43 Moo.12 Petchkasem Rd. Omnoi, Krathumban, Samutsakorn 74130 (Head Office)

Equipment : Digital Conductivity meter with probe

Manufacturer : Apera Model : PC 910

Serial No. : PC910X1220811001 ID No. : WW-03-002

Electrode

Model : N/A Serial No. N/A

ID No. : WW-03-002

Environment : On site calibration was carried out at the Laboratory,

C.E.M Technology (Thailand) Co., Ltd.

Ambient Temperature (26.0 to 27.0) °C

Relative Humidity (45 to 50) %

Date of Received : 11 February 2025

Date of Calibration : 11 February 2025

Date of Issue : 17 February 2025

Calibrated by : Permpon Chanpu

Calibration Method : In-house method CAL-M4301 direct measurement by conductivity buffer solution

Reference Standard Instruments : This certification is traceable to the International System of Units

Standard Buffer Solution

Material	Lot No.	Exp. Date	Traceability
84 µS/cm	0300	01 June 2027	National Institute of Standards and Technology (NIST), U.S.A., S.R.M
1413 µS/cm	970986	25 April 2025	CPA Chem Ltd. Accredited to ISO 17034 and ISO/IEC 17025
12.88 mS/cm	970987	25 April 2025	CPA Chem Ltd. Accredited to ISO 17034 and ISO/IEC 17025

Approved b[redacted]

The Uncertainties are for a confidence probability of approximately 95%

This certificate may not be reproduced other than in full except with the prior written approval of the Calibratech Co.,Ltd.

CAL
Calibratech Co.,Ltd.
7/106-7 Moo 2, Sukhaprachasan 3 Rd., Bangpood, Pakkred, Nonthaburi 11120
Tel.(02) 964-6211 Fax.(02) 964-5155, e-mail : calibratech.cal@yahoo.com, calibratech.cal@hotmail.com

Certificate of Calibration

Certificate No. : 68-430004-2

Result of Calibration :

UUC Condition As-Received : Good

Function : Conductivity measurement

Before Adjustment

Standard Conductivity Solution	UUC Reading	Correction	Uncertainty (±)	Unit
84*	81.9	2.1	1.1	µS/cm
1413	1444	-31	9.0	µS/cm
12.88	12.41	0.47	0.082	mS/cm

After Adjustment : at 25.000, 84, 147, 1413 µS/cm 12.880, 80, 111.80 mS/cm

Standard Conductivity Solution	UUC Reading	Correction	Uncertainty (±)	Unit
84*	84.0	0.0	1.1	µS/cm
1413	1413	0	9.0	µS/cm
12.88	12.88	0.00	0.082	mS/cm

Remark

UUC : Unit Under Calibration

* This parameter are out of accreditation's scope.

This result of calibration was found accurate as shown on date and place of calibration only.

This reported uncertainty of measurement was based on a standard uncertainty multiplied by a coverage factor k = 2 , providing a level of confidence of approximately 95%

-oOo-

[redacted]

CAL
Calibratech Co.,Ltd.
7/106-7 Moo 2, Sukhaprachasan 3 Rd., Bangpood, Pakkred, Nonthaburi 11120
Tel.(02) 964-6211 Fax.(02) 964-5155, e-mail : calibratech.cal@yahoo.com, calibratech.cal@hotmail.com

NSC-TISI-TIS17025
CALIBRATION 0030

Certificate of Calibration

Certificate No. : 68-400089-1

Submitted by : C.E.M Technology (Thailand) Co.,Ltd.
219/43 Moo.12 Petchkasem Rd, Omnoi, Krathumban, Samutsakorn 74130 (Head Office)

Equipment : Temperature Indicator with Thermistor Probe

Temperature Indicator

Manufacturer : Thermo Scientific Model : VERSA STAR PRO
Range : N/A °C Resolution : 0.1 °C
Serial No. : 12260 ID No. : WW-03-001

Thermistor probe

Model : N/A Sheath Material : Stainless
Diameter : 6.5 mm. Length : 120 mm.
Serial No. : PT1-18812 ID No. : WW-03-001

Environment : On site calibration was carried out at the Laboratory,
C.E.M Technology (Thailand) Co., Ltd.

Ambient Temperature : (26.0 to 27.0) °C
Relative Humidity : (45 to 50) %
Line Voltage : (224.5 to 226.0) VAC

Date of Received : 11 February 2025
Date of Calibration : 11 February 2025
Date of Issue : 17 February 2025
Calibrated by : Permpon Chanpu

Calibration Method : This instrument was calibrated by In-house method comparison technique CAL-M4003 by compared with PRT in the dry-well calibrator at the constant controlled temperature.
The temperature scale used was based on ITS-90

Reference Standard Instruments : This certification is traceable to the International System of Units

1. Platinum Resistance Thermometer (PRT)

ID No.	Cert. No.	Due Date	Traceability
400002	TT-0095-24	01 Jul 2026	National Institute of Metrology Thailand (NIMT)

2. Standard Digital Thermometer

ID No.	Cert. No.	Due Date	Traceability
400033	24E633	21 Feb 2026	National Institute of Metro

[redacted]

The Uncertainties are for a confidence probability of approximately 95%

This cerificate may not be reproduced other than in full except with the prior written approval of the Calibratech Co.,Ltd.

CAL
Calibratech Co.,Ltd.
7/106-7 Moo 2, Sukhaprachasan 3 Rd., Bangpood, Pakkred, Nonthaburi 11120
Tel.(02) 964-6211 Fax.(02) 964-5155, e-mail : calibratech_cal@yahoo.com, calibratech_cal@hotmail.com

Certificate of Calibration

Certificate No. : 68-400089-1

Result of Calibration : Without Adjustment

UUC Condition As-Received : Good

Function : Temperature measurement

Immersion Depth (mm.)	Standard Reading (°C)	UUC Reading (°C)	Correction (°C)	Uncertainty (±°C)
130	25.004	25.1	-0.1	0.19

Remark

UUC : Unit Under Calibration

This result of calibration was found accurate as shown on date and place of calibration only.

This reported uncertainty of measurement was based on a standard uncertainty multiplied by a coverage factor k = 2 , providing a level of confidence of approximately 95%

-oOo-

[redacted]

CAL
Calibratech Co.,Ltd.
7/106-7 Moo 2, Sukhaprachasan 3 Rd., Bangpood, Pakkred, Nonthaburi 11120
Tel.(02) 964-6211 Fax.(02) 964-5155, e-mail : calibratech_cal@yahoo.com, calibratech_cal@hotmail.com

ilac-MRA
NSC-TISI-TIS17025
CALIBRATION 0030

Certificate of Calibration

Certificate No. : 68-420017-1

Submitted by : C.E.M Technology (Thailand) Co., Ltd.
219/43 Moo.12 Petchkasem Rd, Omnoi, Krathumban, Samutsakorn 74130 (Head Office)

Equipment : pH Meter with electrode
pH meter
Manufacturer : Thermo Scientific Model : VERSA STAR PRO
Range : N/A pH Resolution : 0.01 pH
Serial No. : 12260 ID No. : WW-03-001
Electrode
Model : 9156BNWP Serial No. : VV1-15843
ID No. : WW-03-001

Environment : On site calibration was carried out at the Laboratory,
C.E.M Technology (Thailand) Co., Ltd.
Ambient Temperature : (26.0 to 27.0)° C
Relative Humidity : (45 to 50) %

Date of Received : 11 February 2025
Date of Calibration : 11 February 2025
Date of Issue : 17 February 2025
Calibrated by : Permpon Chanpu

Calibration Method : In-house method CAL-M4201 direct measurement by using standard voltage calibrator and using certified reference material (CRM)

Reference Standard Instruments : This certification is traceable to the International System of Units

1. Multiproduct Calibrator

ID No.	Cert. No.	Due Date	Traceability
400005	SG-E-00307/66	23 Aug 2025	National Institute of Metrology Thailand (NIMT)

2. Standard Buffer Solution

pH	Cert. No.	Lot No.	Exp. Date	Traceability
4.008	61293328	1027612	15 Sep 2026	CPA Chem Ltd. Accredited
6.987	61297593	1027614	15 Sep 2025	CPA Chem Ltd. Accredited
10.010	61306165	1027613	15 Sep 2025	CPA Chem Ltd. Accredited

[redacted]

Supervisor

The Uncertainties are for a confidence probability of approximately 95%

This cerificate may not be reproduced other than in full except with the prior written approval of the Calibratech Co.,Ltd.

CAL
Calibratech Co.,Ltd.
7/106-7 Moo 2, Sukhaprachasan 3 Rd., Bangpood, Pakkred, Nonthaburi 11120
Tel.(02) 964-6211 Fax.(02) 964-5155, e-mail : calibratech.cal@yahoo.com, calibratech.cal@hotmail.com

Certificate of Calibration

Certificate No. : 68-420017-1

Result of Calibration :

UUC Condition As-Received : Good

Function : Electrical measurement

pH meter

Performing standard curve by Multiproduct Calibrator at pH (4,7,10)

Adjustment Curve at nominal pH	Applied Voltage (mV)	Nominal Value (pH)	UUC Reading (pH)	UUC Reading (mV)	Correction (mV)	Uncertainty (± mV)
4, 7, 10	177.4800	4	4.00	177.4	0.1	0.12
	0.0000	7	7.00	0.0	0.0	0.086
	-177.4800	10	10.00	-177.4	-0.1	0.12

Function : pH meter with electrode

Performing a three - buffer standard curve using buffer nominal pH (4,7,10)

Adjustment Curve at nominal pH	Standard Buffer (pH)	UUC Reading (pH)	Correction (pH)	Uncertainty (± pH)
4, 7, 10	4.008	4.01	0.00	0.0097
	6.987	7.00	-0.01	0.011
	10.010	10.01	0.00	0.014

Remark

UUC : Unit Under Calibration

This result of calibration was found accurate as shown on date and place of calibration only.

This reported uncertainty of measurment was based on a standard uncertainty multiplied by a coverage factor k = 2 , providing a level of confidence of approximately 95%

- oOo -

[redacted]

CAL
Calibratech Co.,Ltd.
7/106-7 Moo 2, Sukhaprachasan 3 Rd., Bangpood, Pakkred, Nonthaburi 11120
Tel.(02) 964-6211 Fax.(02) 964-5155, e-mail : calibratech.cal@yahoo.com, calibratech.cal@hotmail.com

NSC-TISI-TIS17025
CALIBRATION 0030

Certificate of Calibration

Certificate No. : 68-400089-1

Submitted by : C.E.M Technology (Thailand) Co.,Ltd.
219/43 Moo.12 Petchkasem Rd, Omnoi, Krathumban, Samutsakorn 74130 (Head Office)

Equipment : Temperature Indicator with Thermistor Probe

Temperature Indicator

Manufacturer : Thermo Scientific Model : VERSA STAR PRO
Range : N/A °C Resolution : 0.1 °C
Serial No. : 12260 ID No. : WW-03-001

Thermistor probe

Model : N/A Sheath Material : Stainless
Diameter : 6.5 mm. Length : 120 mm.
Serial No. : PT1-18812 ID No. : WW-03-001

Environment : On site calibration was carried out at the Laboratory,
C.E.M Technology (Thailand) Co., Ltd.

Ambient Temperature : (26.0 to 27.0) °C
Relative Humidity : (45 to 50) %
Line Voltage : (224.5 to 226.0) VAC

Date of Received : 11 February 2025
Date of Calibration : 11 February 2025
Date of Issue : 17 February 2025
Calibrated by : Permpon Chanpu

Calibration Method : This instrument was calibrated by In-house method comparison technique CAL-M4003 by compared with PRT in the dry-well calibrator at the constant controlled temperature.
The temperature scale used was based on ITS-90

Reference Standard Instruments : This certification is traceable to the International System of Units

1. Platinum Resistance Thermometer (PRT)

ID No.	Cert. No.	Due Date	Traceability
400002	TT-0095-24	01 Jul 2026	National Institute of Metrology Thailand (NIMT)

2. Standard Digital Thermometer

ID No.	Cert. No.	Due Date	Traceability
400033	24E633	21 Feb 2026	National Institute of Metrology Thailan[redacted]

Approved b[redacted]

The Uncertainties are for a confidence probability of approximately 95%

This cerificate may not be reproduced other than in full except with the prior written approval of the Calibratech Co.,Ltd.

CAL

Calibratech Co.,Ltd.
7/106-7 Moo 2, Sukhaprachasan 3 Rd., Bangpood, Pakkred, Nonthaburi 11120
Tel.(02) 964-6211 Fax.(02) 964-5155, e-mail : calibratech_cal@yahoo.com, calibratech_cal@hotmail.com

Certificate of Calibration

Certificate No. : 68-400089-1

Result of Calibration : Without Adjustment

UUC Condition As-Received : Good

Function : Temperature measurement

Immersion Depth (mm.)	Standard Reading (°C)	UUC Reading (°C)	Correction (°C)	Uncertainty (±°C)
130	25.004	25.1	-0.1	0.19

Remark

UUC : Unit Under Calibration

This result of calibration was found accurate as shown on date and place of calibration only.

This reported uncertainty of measurement was based on a standard uncertainty multiplied by a coverage factor k = 2 , providing a level of confidence of approximately 95%

- o0o -

[redacted]

THAI CALIBRATION SERVICES CO., LTD.
19/8 Moo 9 Soi Raiking 30 Puttamonton 5 Rd., Sampran, Nakornpatom 73210
Tel. 0-3439-7682-5 Fax: 0-3439-7687
www.thaical.com E-mail : sale@thaicalibration.com, lab@thaicalibration.com

NSC-TISI-TIS 17025
CALIBRATION 0189

CALIBRATION CERTIFICATE

Certificate No.S2503003S

Customer : C.E.M TECHNOLOGY (THAILAND) CO., LTD.
219/43 Moo 12 Petchkasem Road, Omnoi,
Krathumban, Samutsakorn 74130

Equipment : Non-automatic weighing instrument (Electronic instrument)

Manufacturer :	Sartorius	**Order No. :**	68S0877-1
Model :	BSA224S-CW	**Ambient temperature :**	(20.2 ± 5.0) °C
Accuracy class :	-	**Relative humidity :**	(54.5 ± 10.0) %
Capacity :	220 g	**Received date :**	01-Mar-2025
Resolution :	0.0001 g	**Date of calibration :**	01-Mar-2025
Serial No. :	3139614148	**Date of issue :**	01-Mar-2025
ID No. :	CI-01-003	**Condition of the balance :**	Good working conditions
Place of calibration :	ห้องเครื่องชั่ง		

Calibration method

This instrument was calibrated according to the EURAMET Calibration Guide No. 18.

Condition of reference standard weight

Instrument	Nominal value	Serial No.	Certificate No.	Due-date	Density (kg/m³)
1 Standard weight set	1 mg to 2 kg	15885+15849	M2410001S	5-Oct-2025	7950

Traceability of the reference standard weight

This certificate is traceable to SI unit through Mass Calibration Laboratory Thai Calibration Services Co., Ltd., NSC-ONSC accredited no. Calibration 0189.

Calibrated By : Sathaporn Rueangpluppla
Technician

Approved Signatory : [redacted]

This calibration certificate may not be reproduced other than in full, except with the prior written approval of the head of TCS calibration laboratory.

NO. 42531

THAI CALIBRATION SERVICES CO., LTD.
19/8 Moo 9 Soi Raiking 30 Puttamonton 5 Rd., Sampran, Nakornpatom 73210
Tel. 0-3439-7682-5 Fax: 0-3439-7687
www.thaical.com E-mail : sale@thaicalibration.com, lab@thaicalibration.com

NSC-TISI-TIS 17025 CALIBRATION 0189

CALIBRATION CERTIFICATE

Certificate No.S2503003S

The repeatability of indication

Nominal Value (g)	Standard Deviation of reading (g)	Maximum difference between successive reading (g)	n
200	0.00000	0.0000	5

The effect of eccentric application of a load on the indication (test load : 100 g)

Position	Balance Reading (g)
Point 1	100.0000
Point 2	100.0000
Point 3	99.9999
Point 4	99.9998
Point 5	100.0000
Eccentric Value	0.0002

The error of indication

Nominal Value (g)	Value of Reference Standard Weight (g)	Balance Reading (g)	Correction (g)	Uncertainty (±) (g)	k
Unload	0.0000	0.0000	0.0000	0.000082	2.00
1	1.0000	1.0000	0.0000	0.000085	2.00
2	2.0000	2.0000	0.0000	0.000087	2.00
5	5.0000	5.0001	-0.0001	0.000090	2.00
10	10.0000	10.0000	0.0000	0.000094	2.00
20	20.0000	20.0000	0.0000	0.00011	2.00
50	50.0000	50.0000	0.0000	0.00013	2.00
100	100.0000	100.0000	0.0000	0.00019	2.00
120	120.0000	120.0001	-0.0001	0.00024	2.00
150	150.0000	150.0000	0.0000	0.00027	2.00
200	200.0002	200.0000	+0.0002	0.00033	2.00

Remark : Adjustment, Internal weight

Uncertainty of measurement

The reported expanded uncertainty of measurement is stated as the standard uncertainty of measurement multiplied by the coverage factor (*k*), which for a normal distribution corresponds to a coverage probability of approximately 95% (confidence level).

This report will certify of the calibrated equipment only.

--End--

THAI CALIBRATION SERVICES CO., LTD.
19/8 Moo 9 Soi Raiking 30 Puttamonton 5 Rd., Sampran, Nakornpatom 73210
Tel. 0-3439-7682-5 Fax: 0-3439-7687
www.thaical.com E-mail : sale@thaicalibration.com, lab@thaicalibration.com

NSC-TISI-TIS 17025 CALIBRATION 0189

CALIBRATION CERTIFICATE

Certificate No.S2505043S

Customer : C.E.M. TECHNOLOGY (THAILAND) CO., LTD.
219/43 Moo 12, Petchkasem Rd., Omnoi,
Krathumban, Samutsakorn 74130

Equipment : Non-automatic weighing instrument (Electronic instrument)

Manufacturer :	Sartorius	**Order No. :**	68S1799-1
Model :	QUINTIX224-1S	**Ambient temperature :**	(23.9 ± 1.0) °C
Accuracy class :	-	**Relative humidity :**	(38.9 ± 5.0) %
Capacity :	220000 mg	**Received date :**	30-Apr-2025
Resolution :	0.1 mg	**Date of calibration :**	30-Apr-2025
Serial No. :	0035009070	**Date of issue :**	03-May-2025
ID No. :	CI-01-002	**Condition of the balance :**	Good working conditions
Place of calibration :	ห้องเครื่องชั่ง		

Calibration method

This instrument was calibrated according to the EURAMET Calibration Guide No. 18.

Condition of reference standard weight

Instrument	Nominal value	Serial No.	Certificate No.	Due-date	Density (kg/m³)
1 Standard weight set	1 mg to 2 kg	15885+15849	M2410001S	5-Oct-2025	7950

Traceability of the reference standard weight

This certificate is traceable to SI unit through Mass Calibration Laboratory Thai Calibration Services Co., Ltd., NSC-ONSC accredited no. Calibration 0189.

Calibrated By : Aekhasak Silarut
Technician

Approved Signator [redacted]

This calibration certificate may not be reproduced other than in full, except with the prior written approval of the head of TCS calibration laboratory.

THAI CALIBRATION SERVICES CO., LTD.
19/8 Moo 9 Soi Raiking 30 Puttamonton 5 Rd., Sampran, Nakornpatom 73210
Tel. 0-3439-7682-5 Fax: 0-3439-7687
www.thaical.com E-mail : sale@thaicalibration.com, lab@thaicalibration.com

NSC-TISI-TIS 17025
CALIBRATION 0189

CALIBRATION CERTIFICATE

Certificate No.S2505043S

The repeatability of indication

Nominal Value (mg)	Standard Deviation of reading (mg)	Maximum difference between successive reading (mg)	n
200000	0.04	0.1	5

The effect of eccentric application of a load on the indication (test load : 100000 mg)

Position	Balance Reading (mg)
Point 1	99999.8
Point 2	99999.8
Point 3	99999.8
Point 4	99999.6
Point 5	99999.6
Eccentric Value	0.2

The error of indication

Nominal Value (mg)	Value of Reference Standard Weight (mg)	Balance Reading (mg)	Correction (mg)	Uncertainty (±) (mg)	*k*
Unload	0.0	0.0	0.0	0.14	2.21
100	100.0	100.0	0.0	0.14	2.21
200	200.0	200.1	-0.1	0.14	2.21
500	500.0	500.0	0.0	0.14	2.20
1000	1000.0	1000.0	0.0	0.14	2.20
2000	2000.0	2000.0	0.0	0.14	2.20
5000	5000.0	5000.1	-0.1	0.14	2.18
10000	10000.0	10000.0	0.0	0.14	2.16
20000	20000.0	20000.0	0.0	0.15	2.13
50000	50000.0	50000.0	0.0	0.16	2.08
100000	100000.0	99999.8	+0.2	0.21	2.00
200000	200000.2	199999.7	+0.5	0.34	2.00

Remark : Without adjustment

Uncertainty of measurement

The reported expanded uncertainty of measurement is stated as the standard uncertainty of measurement multiplied by the coverage factor (*k*), which for a normal distribution corresponds to a coverage probability of approximately 95% (confidence level).

This report will certify of the calibrated equipment only.

--End--